redrockmicro

Title: ultraAccessories
Scene: wireLock Installation Guide

Date: 04.01.12

*wireLock works with most DSLRs. Some tall cameras (such as 1DX, D4) may not be suppported.

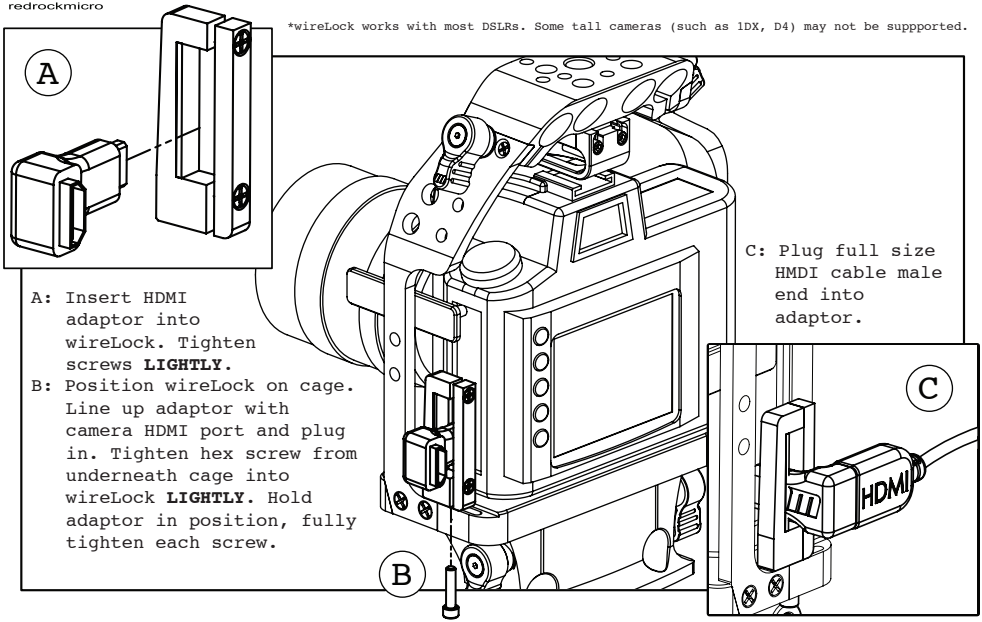

A: Insert HDMI adaptor into wireLock. Tighten screws **LIGHTLY.**

B: Position wireLock on cage. Line up adaptor with camera HDMI port and plug in. Tighten hex screw from underneath cage into wireLock **LIGHTLY.** Hold adaptor in position, fully tighten each screw.

C: Plug full size HMDI cable male end into adaptor.